Pareto
Aluminum Systems

ALFO™
Aluminum Flooring System
www.paretoas.com

ALFO 3.0 Installation Guide

#	Description	Picture	#	Description	Pictures
1	3/8” Allen key for 3/8”-16 - Bolt		4	Alignment Hangers 2 Sets	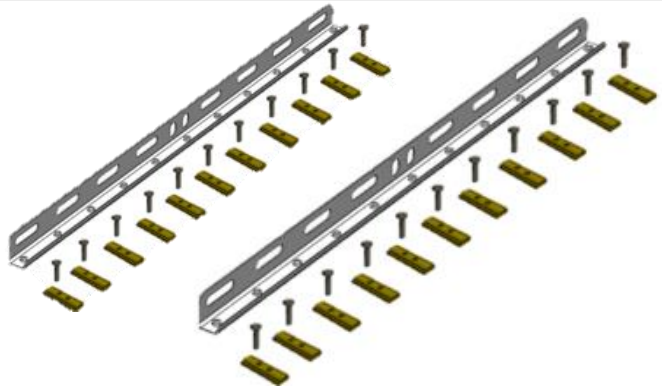
2	Standard 3/8” Drill Bit Special 3/8” x 8” Drill Bit		5	Gerflor Template	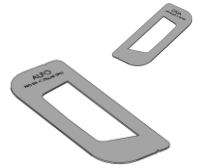 Trimming Template for Gerfloor  Trimming Template for Gerfloor WB148, WB130
3	Drill Drive		6	Scissor & Utility Knife	 

These items are not included in the package

#	Install Step	Description of the steps	Pictures
1	Unbox the Crate and Place the Panels on a Worktable	• Check all panels availability as per the kit BOM available on the website. • https://paretoas.com/alfo-kits/ • Each panel has a unique part # printed on the label. • Arrange the panels on table as per required configuration (refer page **#09-#19 i.e, fig1.1-fig1.12)**	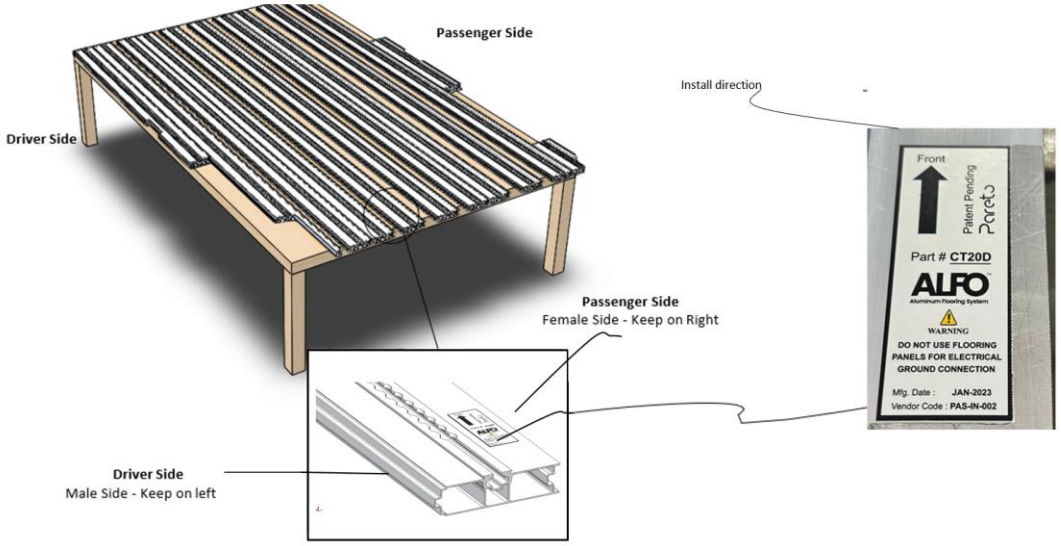
2	Attach ALFO Spacers Ensure that the ALFO spacers are levelled with the floor ribs on the chassis floor.	• Glue or screw all ALFO spacers at the location shown in the picture. • 2 holes need to be drilled on the spacer if it is required to be screwed ,use self tapping screw to attach Spacer. • If glued, compress the glue until the top surface of the spacer aligns with the top surface of floor ribs on the van floor **Glue is not included in the package**	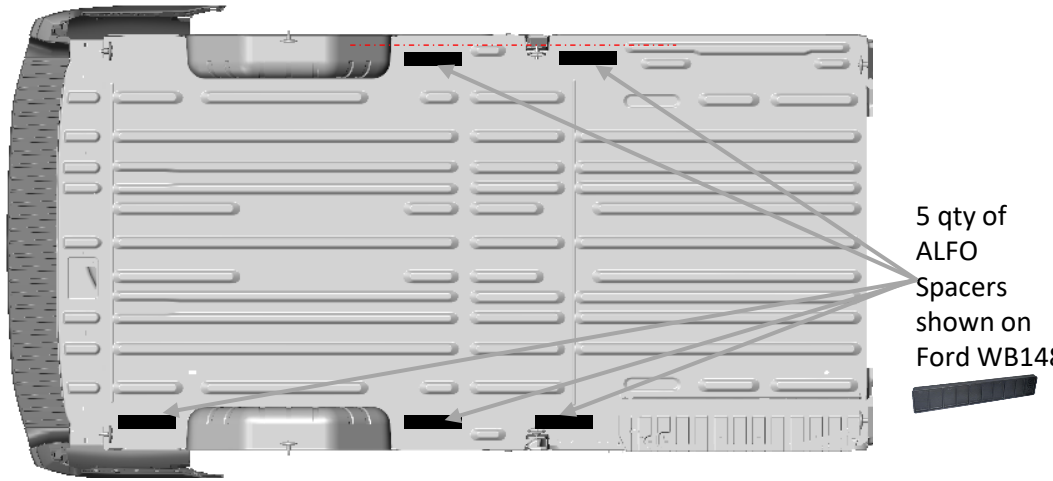

#	Install Step	Description of the steps	Pictures
3	Connect the 12 Panels as Shown. Use Hangers to Align the Holes on All Panels Ensure that the holes are aligned across panels. Pareto's flexible legs cannot be used if holes are not aligned.	• Connect 12 panels starting from the passenger side (P-side), layout shown in **page #09-#19** base on the type of kit**(Fig 1.1-Fig 1.12).** • Install the hangers with manual foot inside every L-tracks, this is important for aligning holes across panels • Ensure that the passenger side panel (**PT**) is installed in accordance with the dimensions shown in Fig 2.1- Fig 2.5 • Hangers not only aligns holes, but also keeps the panels together during installation and bolting in the van	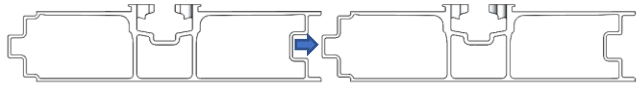 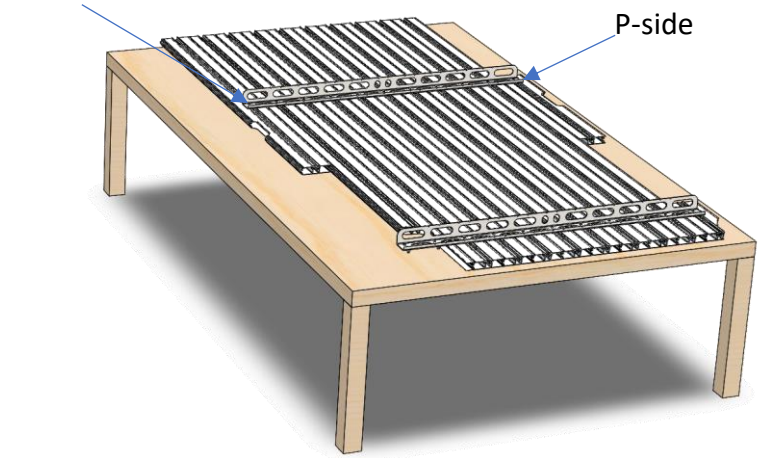 Hangers 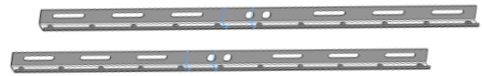
4	Apply Aktivator	• Tilt the floor and apply Sika Aktivator 205 on the bottom of ALFO floor as shown below using the paint brush.	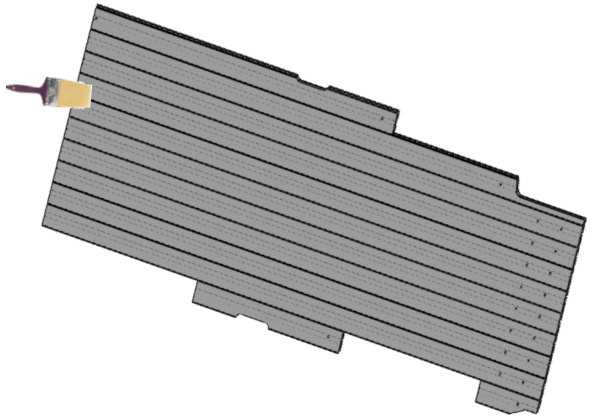

Alignment hangers and Sika Akivator 205 are not included in the package

#	Install Step	Description of the steps	Pictures
5	Apply glue on vehicle floor ⚠ Use gloves to lift	• Apply Sikaflex 255 FC on the ribs of vehicle floor as shown in picture throughout the length. **Sikaflex 255 FC is not included in the package.**	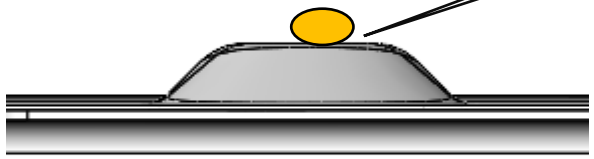 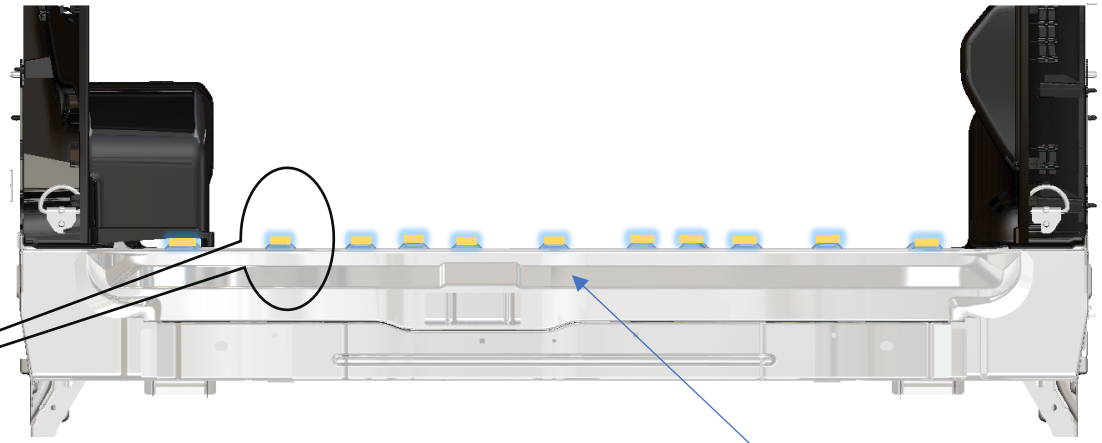 **Glue bead** 

#	Install Step	Description of the steps	Pictures
6	Take the Assembly With Hangers in the Van.	• Lift the panel assembly , and put it inside the van • Ensure that the there is enough space left on sides to install foam sticks and foam corners. • Adjust the forward and cross car direction as required.	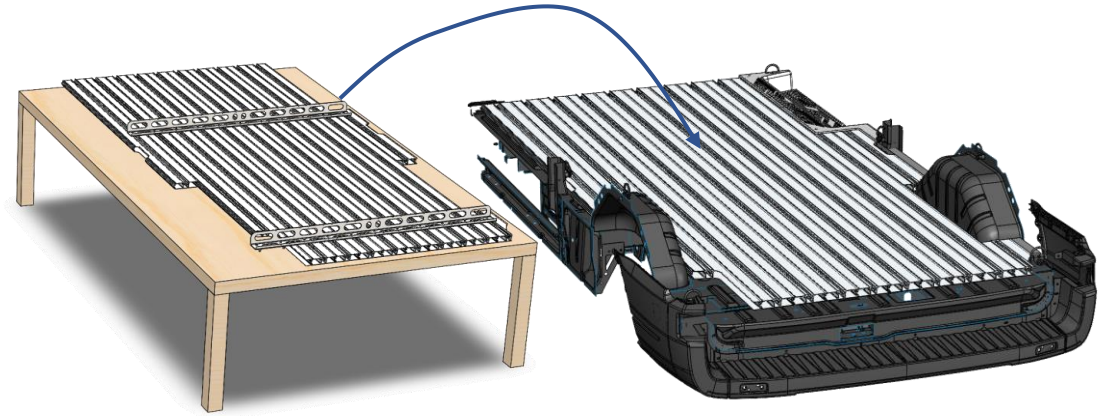
7	Hole Alignment Inspection Pareto's flexible legs cannot be used if the holes are not aligned.	• Inspect the hole alignment with the locating pod at multiple places as shown.	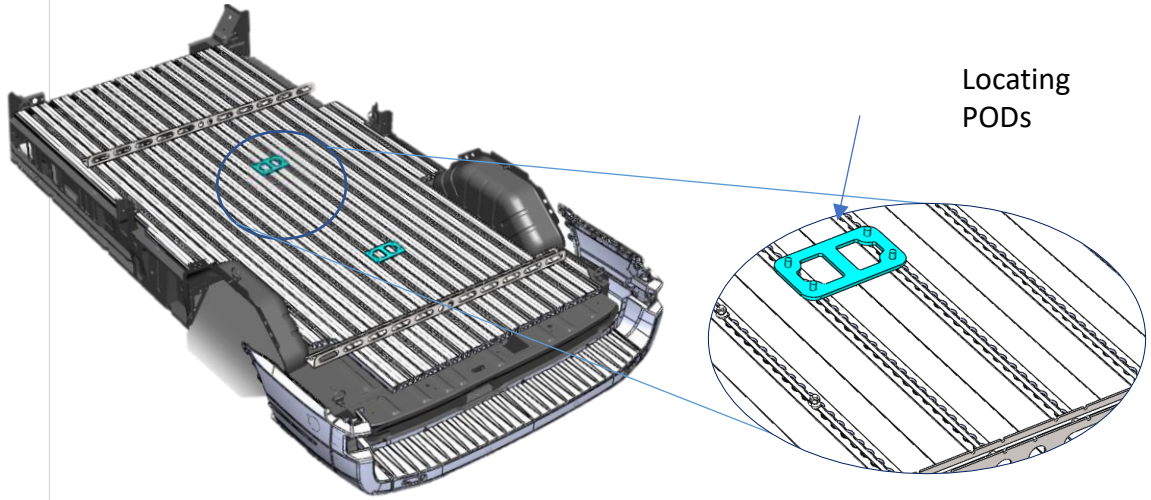

#	Install Step	Description of the steps	Pictures
8	Fit With Foam ⚠ Use gloves while cutting the foam	• Put the foam sides and foam corner as shown in the picture.	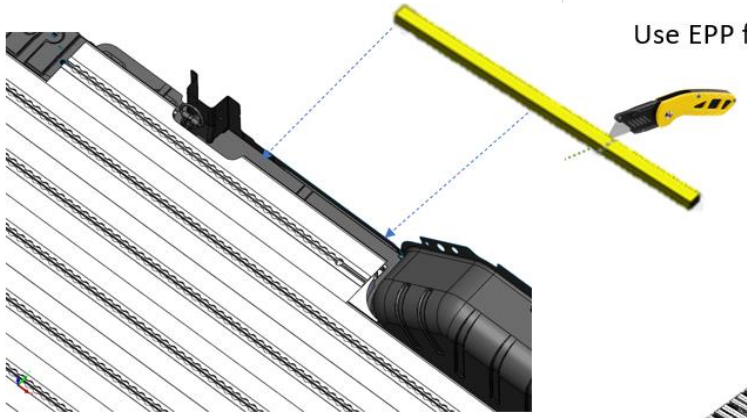 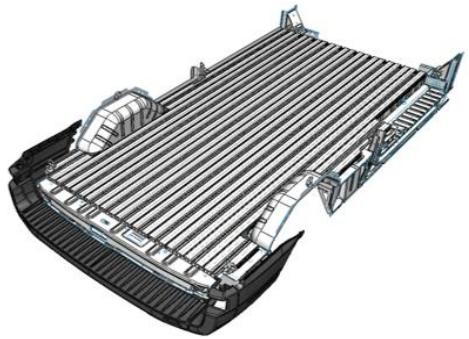 Use EPP foam of ¾” to fill the gaps(included in kit) 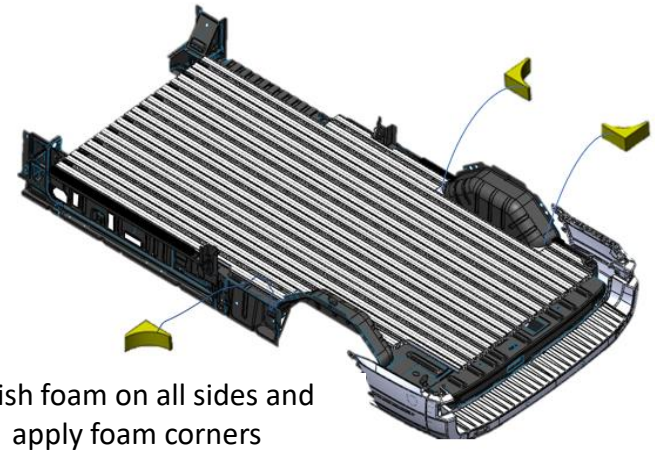 Finish foam on all sides and apply foam corners

#	Install Step	Description of the steps	Pictures
9	Drilling, Bolting at the Rear Ensure that a bolt is inserted after drilling each hole. This helps to restrict the movement of the floor while drilling the next hole. Ensure that washer plate or double washers are used on the top and the bolts are tightened with a torque of 60 Nm	• **Do not uninstall the hanger until step 8 is completed.** • Drill the OEM body using the through holes at the rear end of the panels. • Based on the type of floor, use specific bolts length at specific locations as shown in page **#09-#19 (fig 1.1- fig 1.11)** • Tighten the nuts with underbody reinforcement plates and washers.	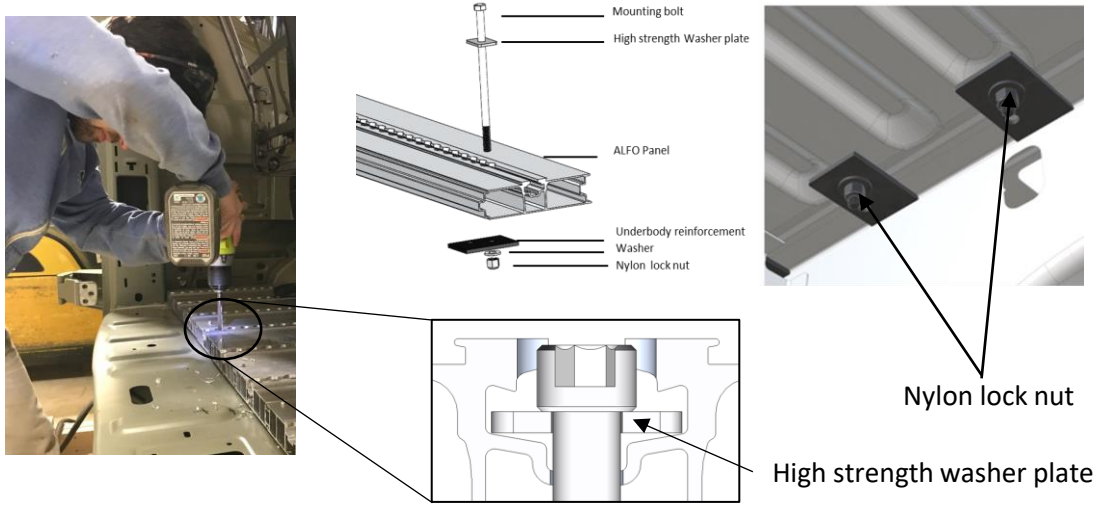 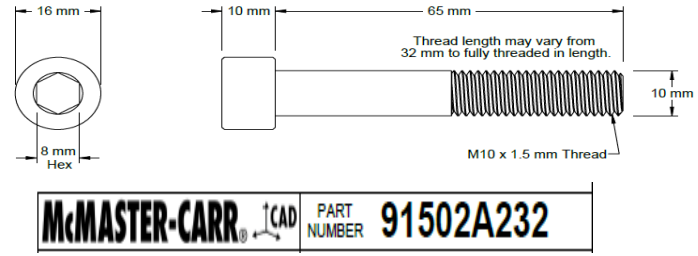

#	Install Step	Description of the steps	Pictures
10	*Optional* Set the Peel and Stick Gerflor	• Ensure that all foam sides and corner foams are in place before sticking Gerflor • Clean the surface of the panel with rubbing alcohol • Peel the Gerflor and stick it on the floor • Use Gerflor templates to cut the Gerflor for wheel well and C pillar areas • Using scissors instead of knife, to cut -wheel well and C pillar area, enable safer, faster and better-perceived quality.	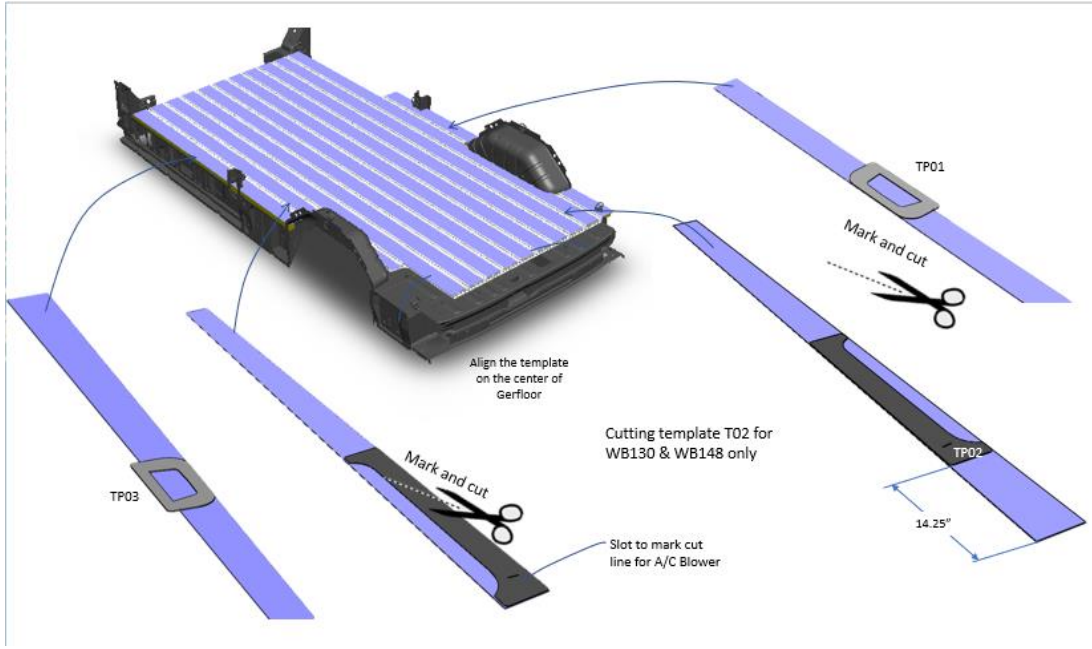

Maintenance:

- Check the torque value every 6 months. If any looseness is observed, replace the fasteners immediately — do not reuse loosened ones.

- Inspect fasteners for rust or damage. If any defect is found, replace the fasteners without delay.

Only for Ford Transit vehicle (Figure 1.1 to 1.6)

- On the 3rd panel from the left and right, move the hole/bolt to 6” forward, for that is clears the bumper structure under the floor

No seats should be bolted in the 6” area highlighted below

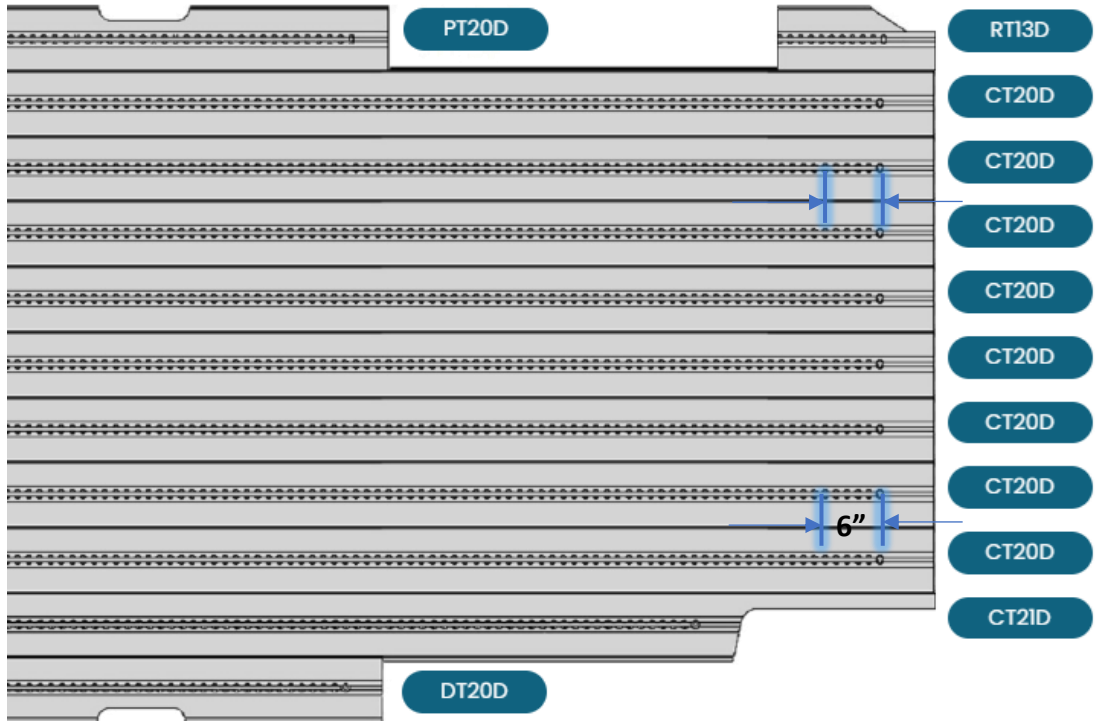

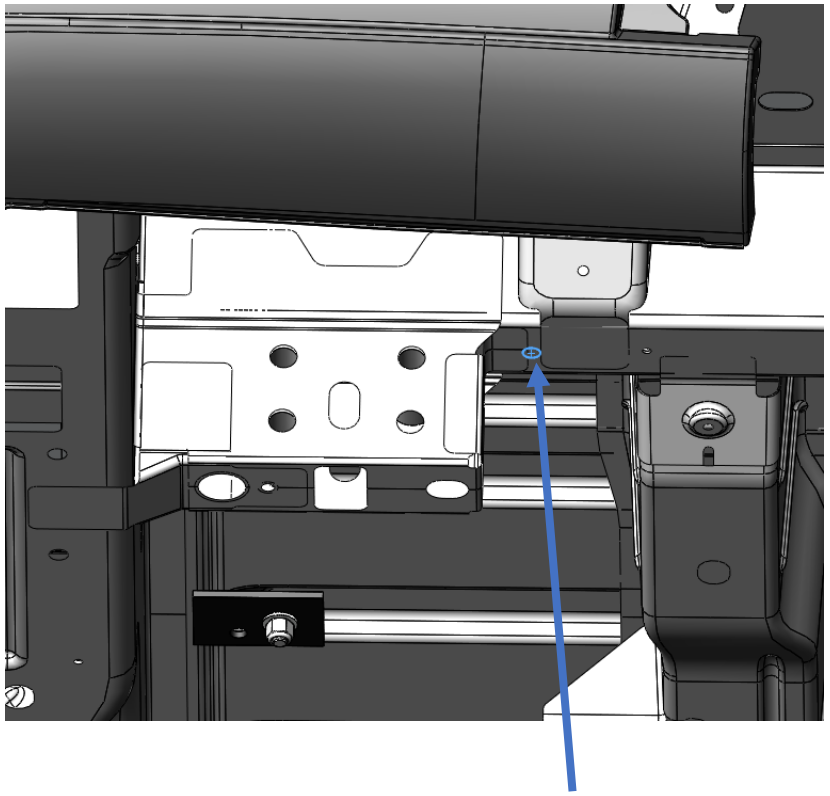

Moving bolt/Hole 6” forward clears the bumper structure

Figure 1.1

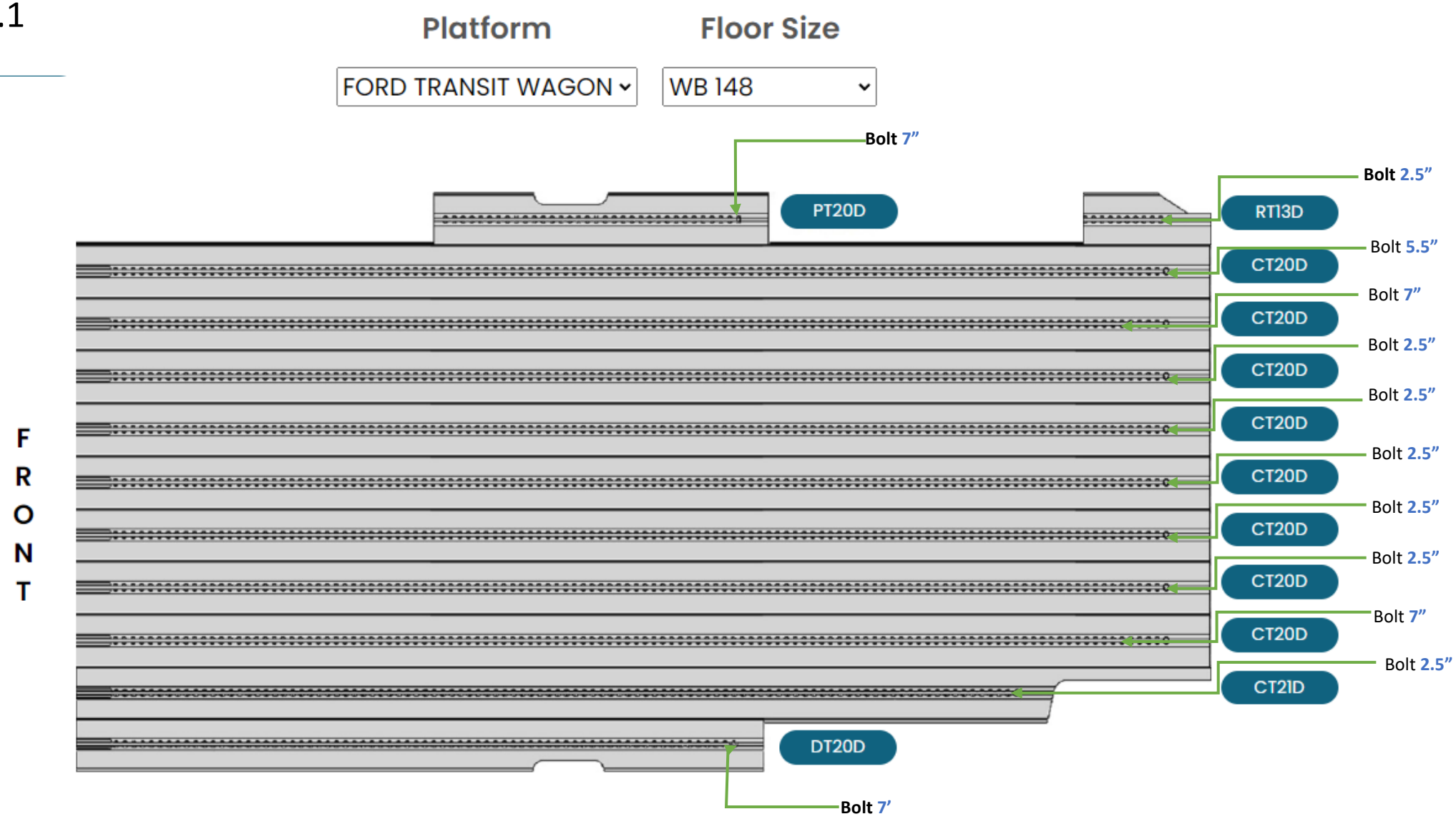
Platform
Floor Size
FORD TRANSIT WAGON
WB 148
Bolt 7”
PT20D
Bolt 2.5”
RT13D
Bolt 5.5”
CT20D
Bolt 7”
CT20D
Bolt 2.5”
CT20D
Bolt 2.5”
CT20D
Bolt 2.5”
CT20D
Bolt 2.5”
CT20D
Bolt 2.5”
CT20D
Bolt 7”
CT20D
Bolt 2.5”
CT21D
DT20D
Bolt 7’
FRONT

Figure 1.2

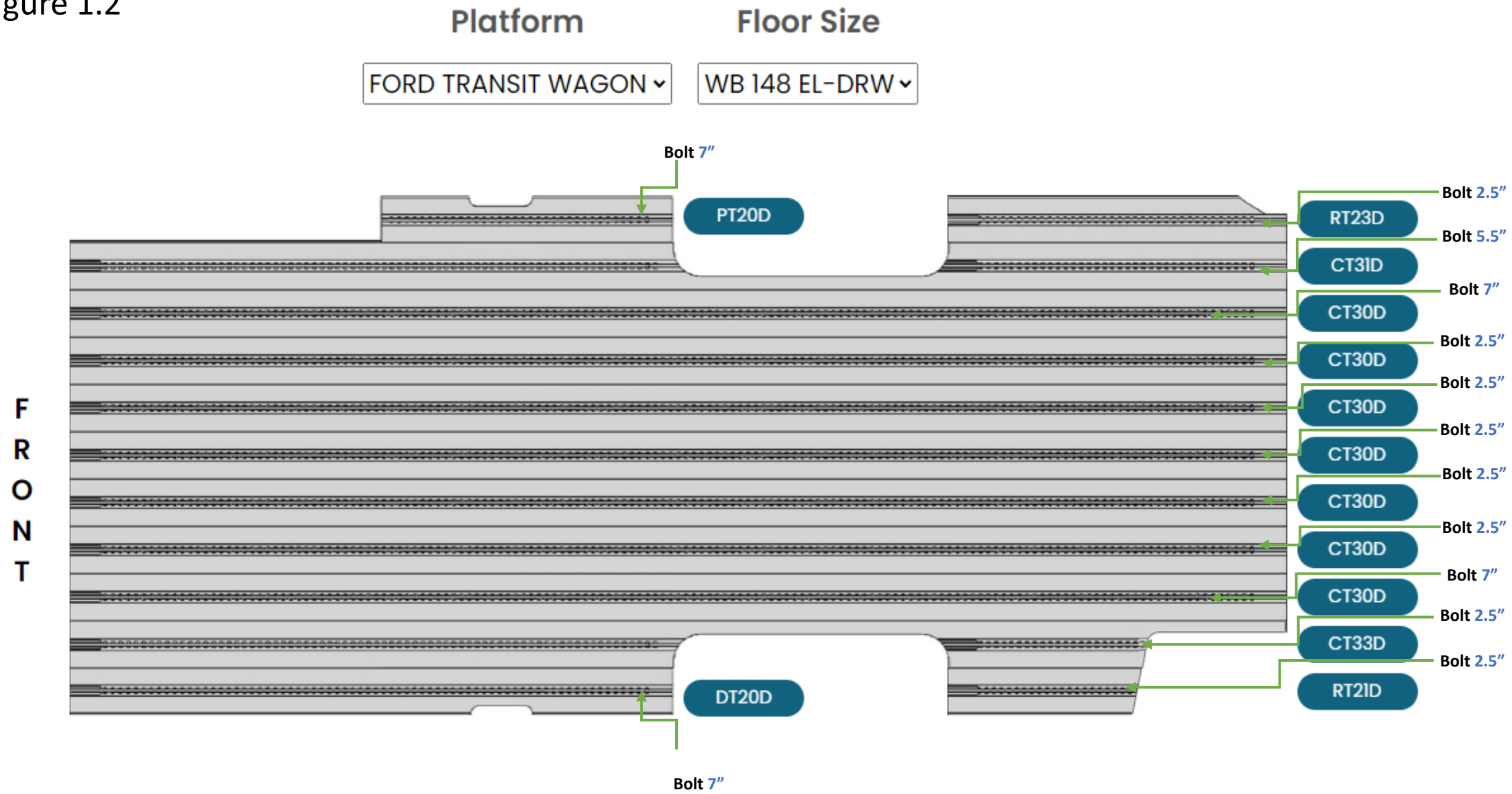
Platform
Floor Size
FORD TRANSIT WAGON
WB 148 EL-DRW
Bolt 7”
PT20D
Bolt 2.5”
RT23D
Bolt 5.5”
CT31D
Bolt 7”
CT30D
Bolt 2.5”
CT30D
Bolt 2.5”
CT30D
Bolt 2.5”
CT30D
Bolt 2.5”
CT30D
Bolt 2.5”
CT30D
Bolt 7”
CT30D
Bolt 2.5”
CT33D
Bolt 2.5”
RT21D
FRONT
DT20D
Bolt 7”

Figure 1.3

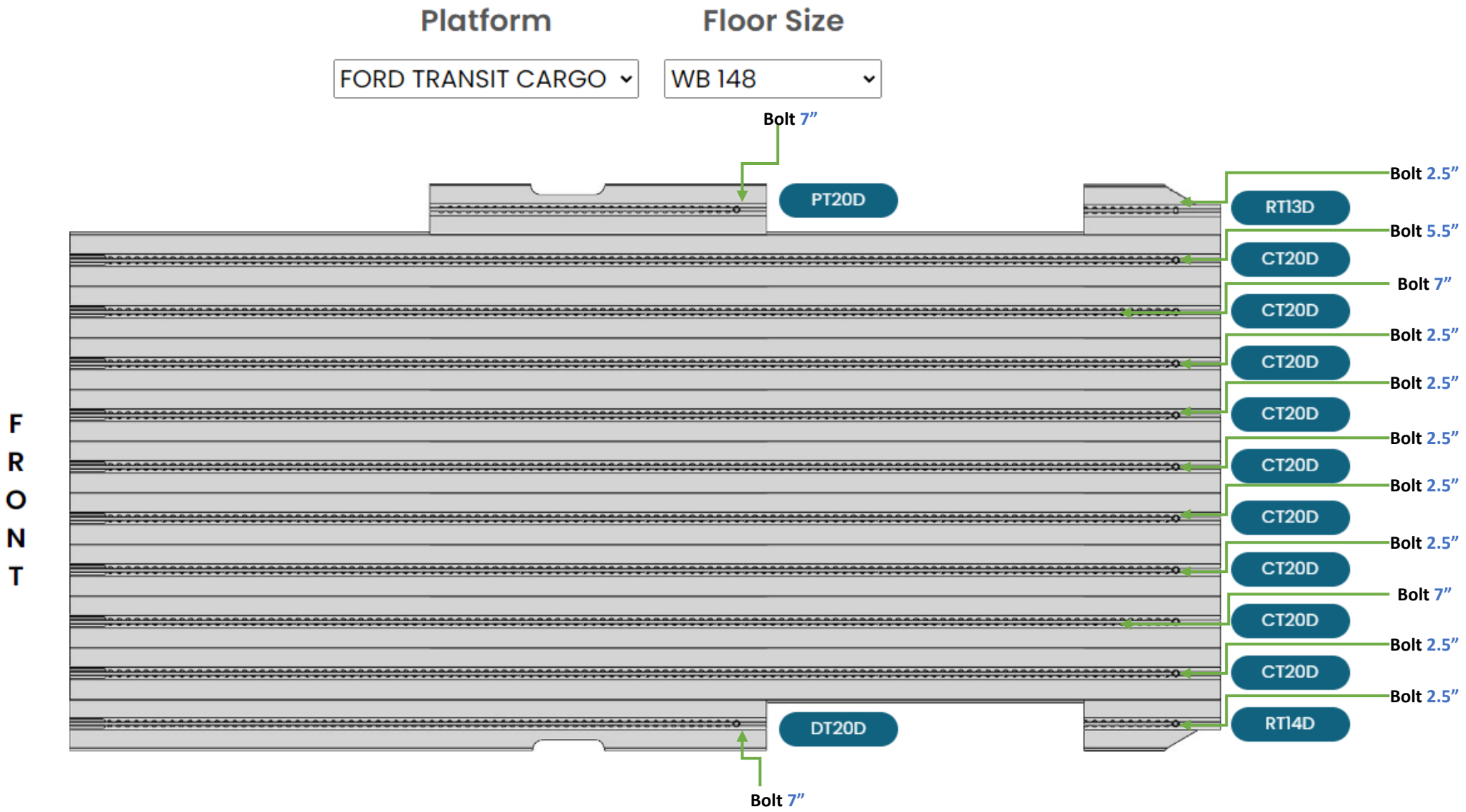
Platform
Floor Size
FORD TRANSIT CARGO
WB 148
Bolt 7”
PT20D
Bolt 2.5”
RT13D
Bolt 5.5”
CT20D
Bolt 7”
CT20D
Bolt 2.5”
CT20D
Bolt 2.5”
CT20D
Bolt 2.5”
CT20D
Bolt 2.5”
CT20D
Bolt 2.5”
CT20D
Bolt 7”
CT20D
Bolt 2.5”
CT20D
Bolt 2.5”
RT14D
DT20D
Bolt 7”
FRONT

Figure 1.4

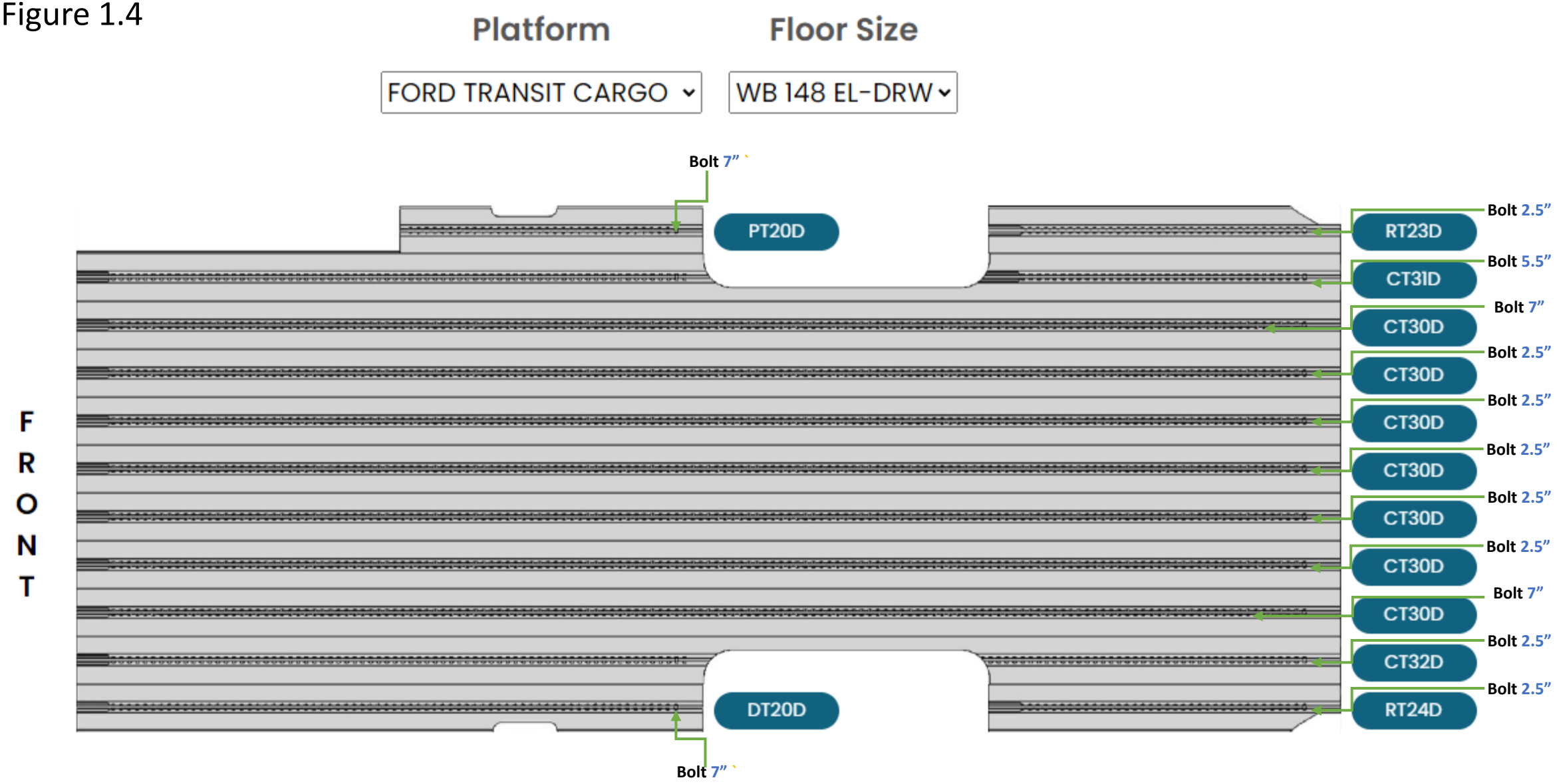
Platform
Floor Size
FORD TRANSIT CARGO
WB 148 EL-DRW
Bolt 7”
PT20D
RT23D
Bolt 2.5”
Bolt 5.5”
CT31D
Bolt 7”
CT30D
Bolt 2.5”
CT30D
Bolt 2.5”
CT30D
Bolt 2.5”
CT30D
Bolt 2.5”
CT30D
Bolt 2.5”
CT30D
Bolt 7”
CT30D
Bolt 2.5”
CT32D
Bolt 2.5”
RT24D
DT20D
Bolt 7”
FRONT

Figure 1.5

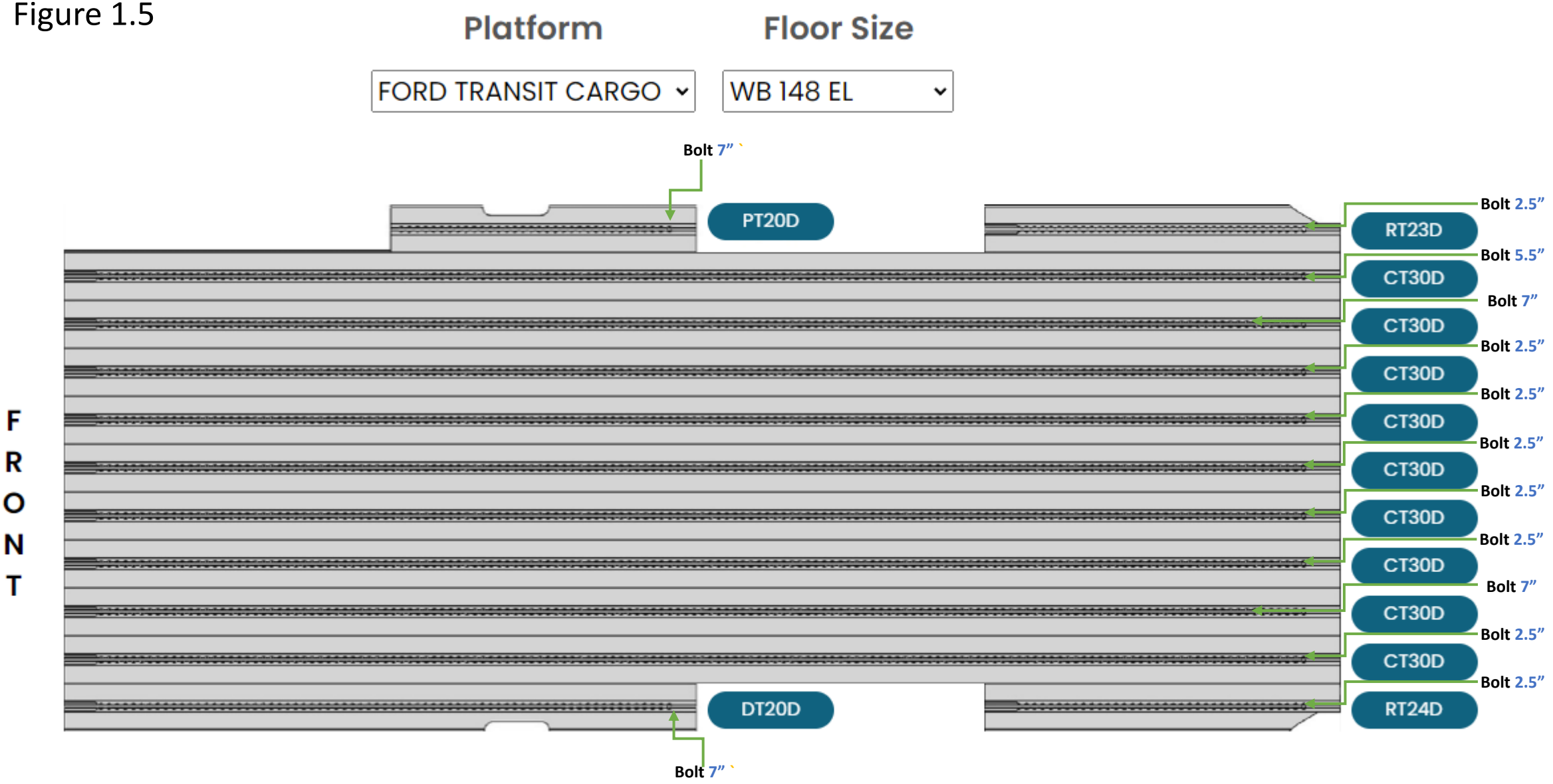
Platform
Floor Size
FORD TRANSIT CARGO
WB 148 EL
Bolt 7"
PT20D
Bolt 2.5"
RT23D
Bolt 5.5"
CT30D
Bolt 7"
CT30D
Bolt 2.5"
CT30D
Bolt 2.5"
CT30D
Bolt 2.5"
CT30D
Bolt 2.5"
CT30D
Bolt 2.5"
CT30D
Bolt 7"
CT30D
Bolt 2.5"
CT30D
Bolt 2.5"
RT24D
DT20D
Bolt 7"
FRONT

Figure 1.6

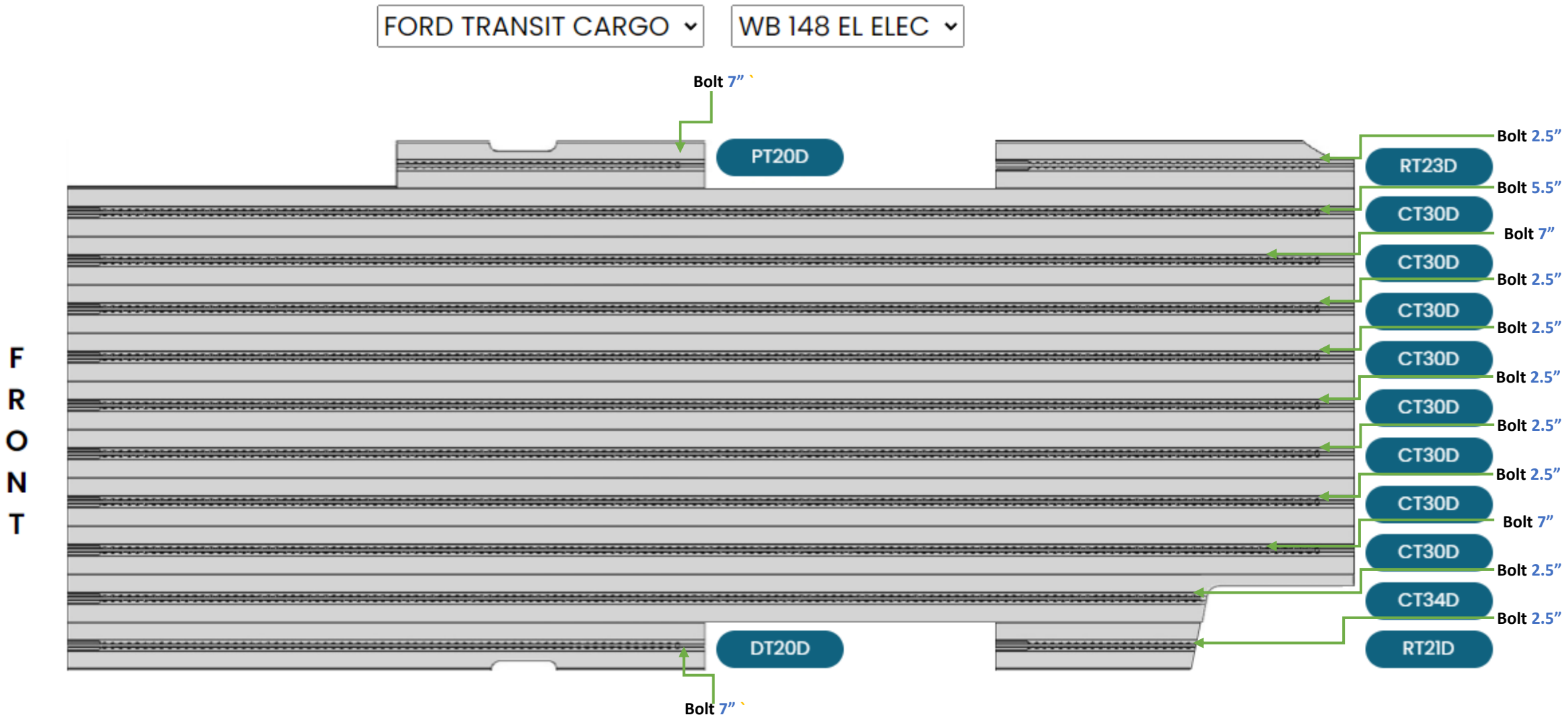
FORD TRANSIT CARGO
WB 148 EL ELEC
Bolt 7”
PT20D
Bolt 2.5”
RT23D
Bolt 5.5”
CT30D
Bolt 7”
CT30D
Bolt 2.5”
CT30D
Bolt 2.5”
CT30D
Bolt 2.5”
CT30D
Bolt 2.5”
CT30D
Bolt 2.5”
CT30D
Bolt 7”
CT30D
Bolt 2.5”
CT34D
Bolt 2.5”
RT21D
DT20D
Bolt 7”
FRONT

Figure 1.7

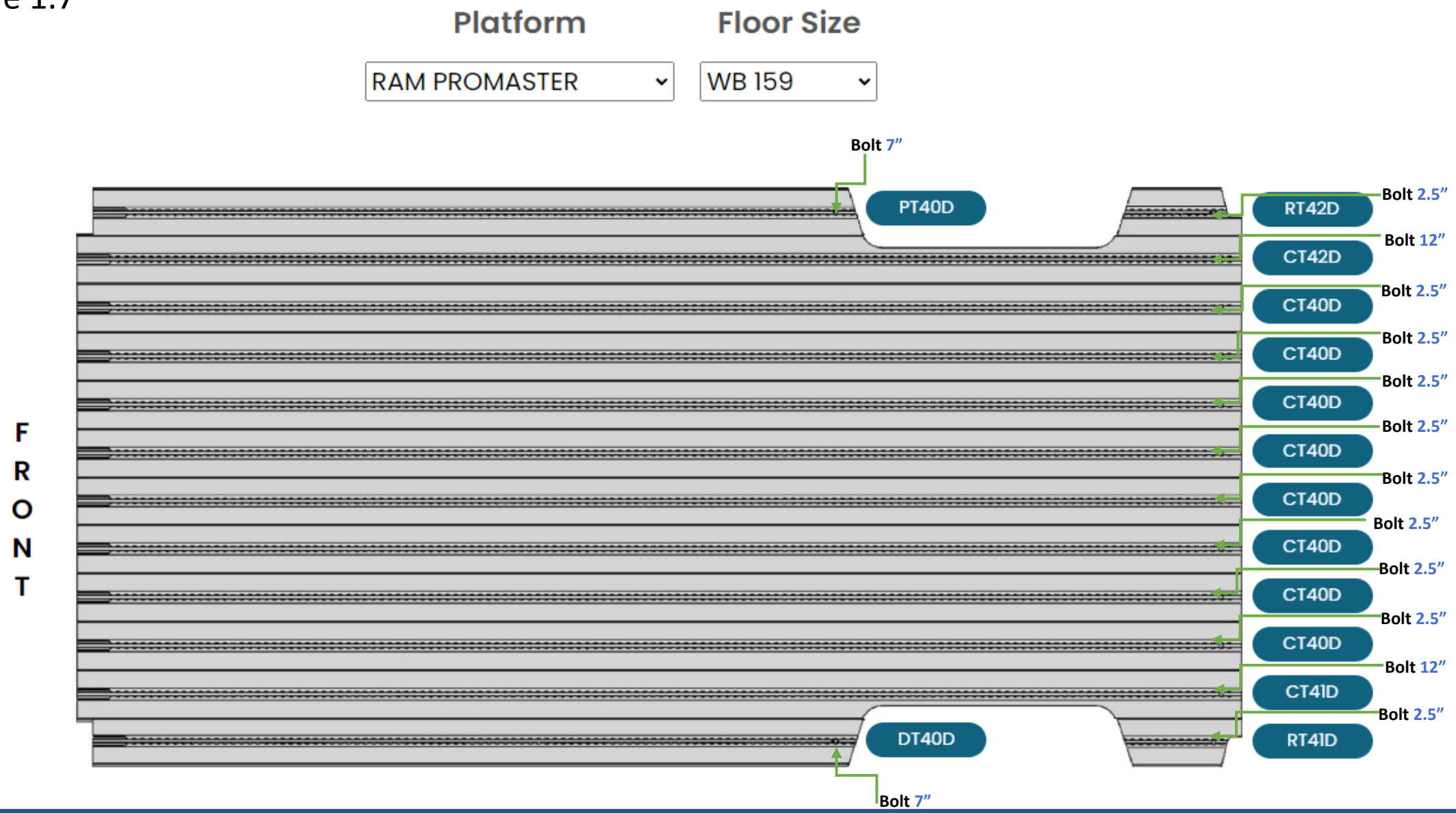
Platform
RAM PROMASTER
Floor Size
WB 159
Bolt 7”
PT40D
RT42D
Bolt 2.5”
Bolt 12”
CT42D
CT40D
Bolt 2.5”
CT40D
Bolt 2.5”
CT40D
Bolt 2.5”
CT40D
Bolt 2.5”
CT40D
Bolt 2.5”
CT40D
Bolt 2.5”
CT40D
Bolt 2.5”
CT40D
Bolt 2.5”
CT41D
Bolt 12”
RT41D
Bolt 2.5”
DT40D
Bolt 7”
FRONT

Figure 1.8

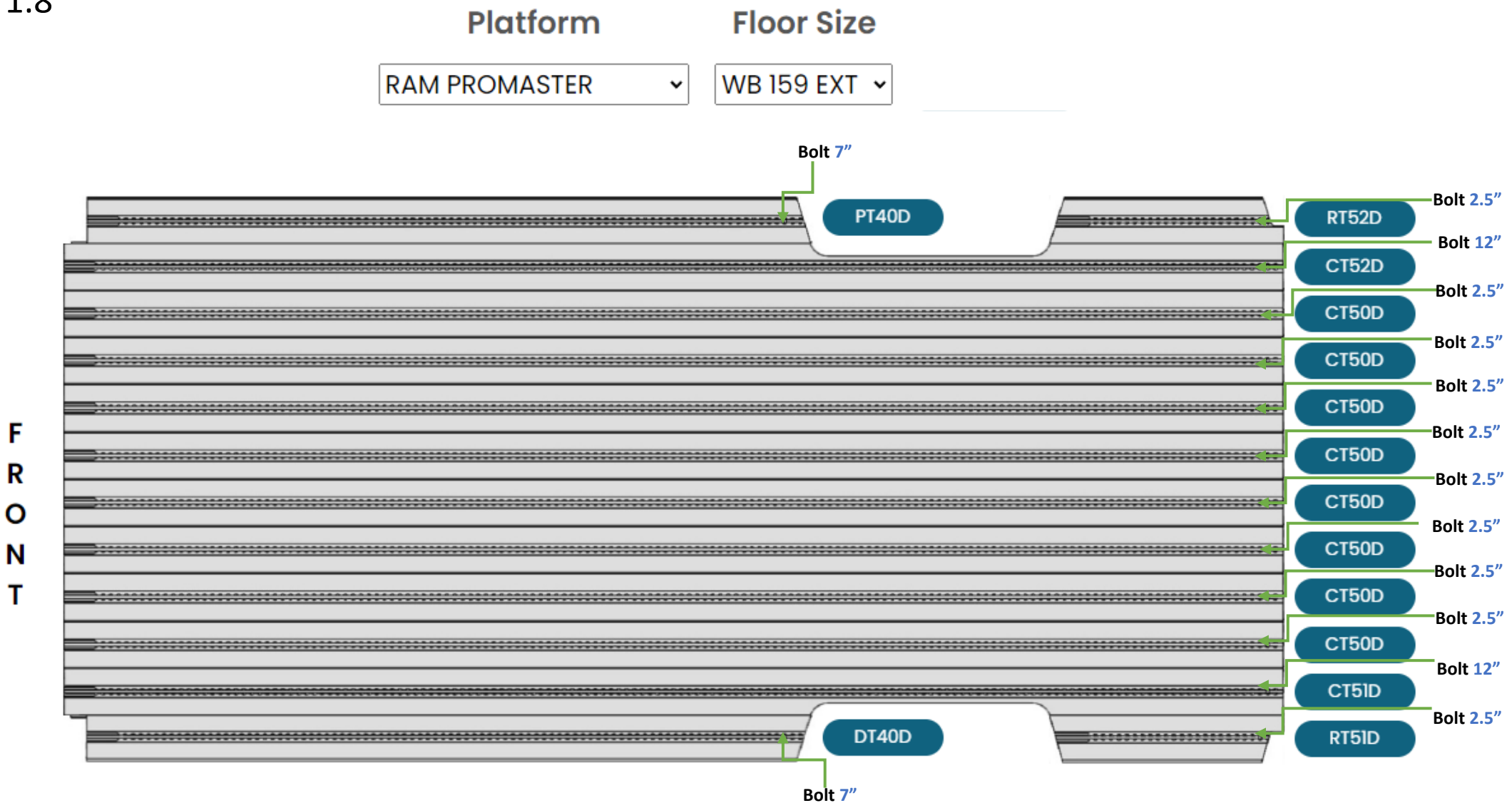
Platform
RAM PROMASTER
Floor Size
WB 159 EXT
Bolt 7”
PT40D
Bolt 2.5”
RT52D
Bolt 12”
CT52D
Bolt 2.5”
CT50D
Bolt 2.5”
CT50D
Bolt 2.5”
CT50D
Bolt 2.5”
CT50D
Bolt 2.5”
CT50D
Bolt 2.5”
CT50D
Bolt 2.5”
CT50D
Bolt 2.5”
CT50D
Bolt 12”
CT51D
Bolt 2.5”
RT51D
DT40D
Bolt 7”
FRONT

Figure 1.9

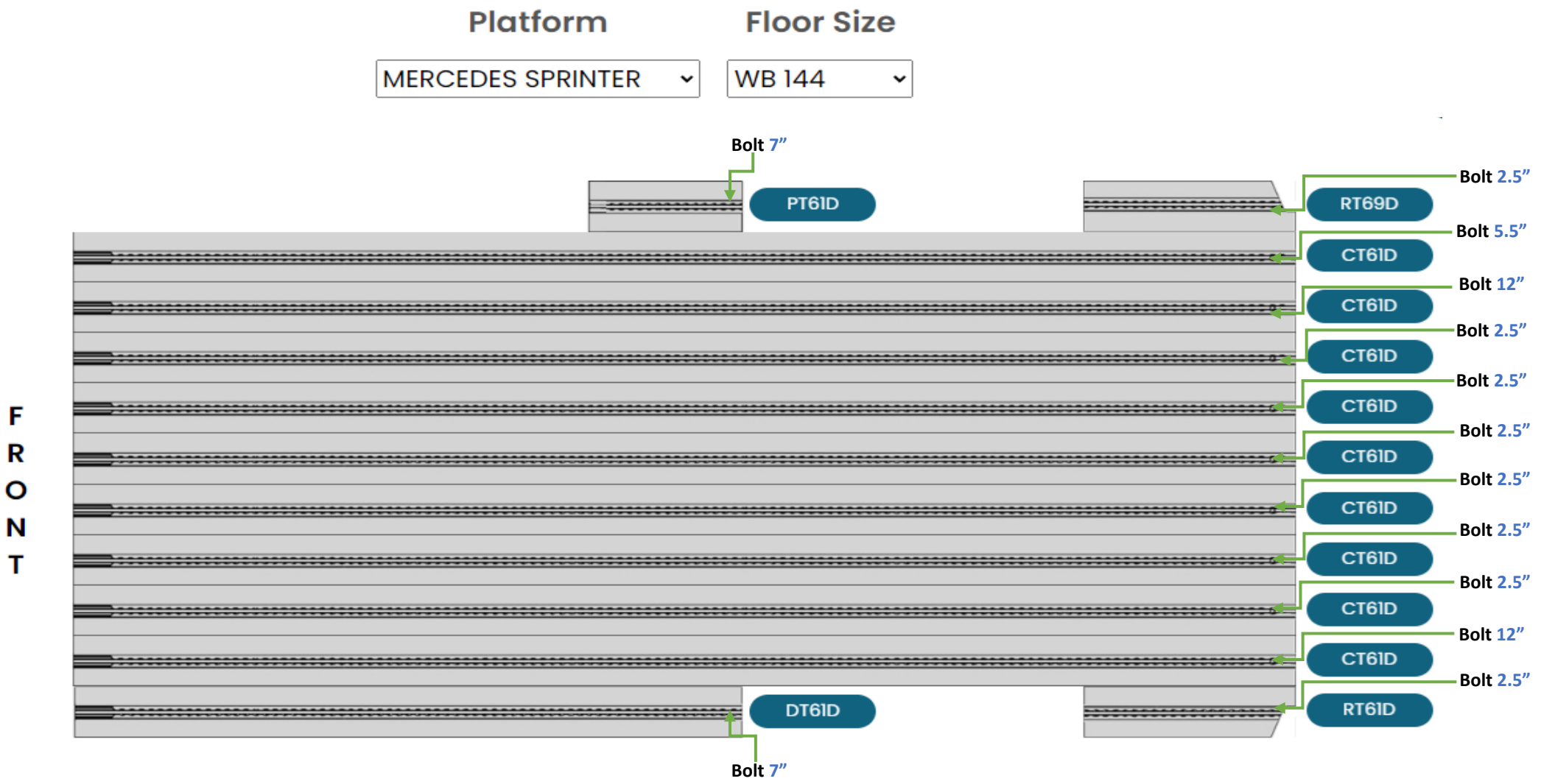
Platform
MERCEDES SPRINTER
Floor Size
WB 144
Bolt 7”
PT6ID
Bolt 2.5”
RT69D
Bolt 5.5”
CT6ID
Bolt 12”
CT6ID
Bolt 2.5”
CT6ID
Bolt 2.5”
CT6ID
Bolt 2.5”
CT6ID
Bolt 2.5”
CT6ID
Bolt 2.5”
CT6ID
Bolt 2.5”
CT6ID
Bolt 12”
CT6ID
Bolt 2.5”
RT6ID
DT6ID
Bolt 7”
FRONT

Figure 1.10

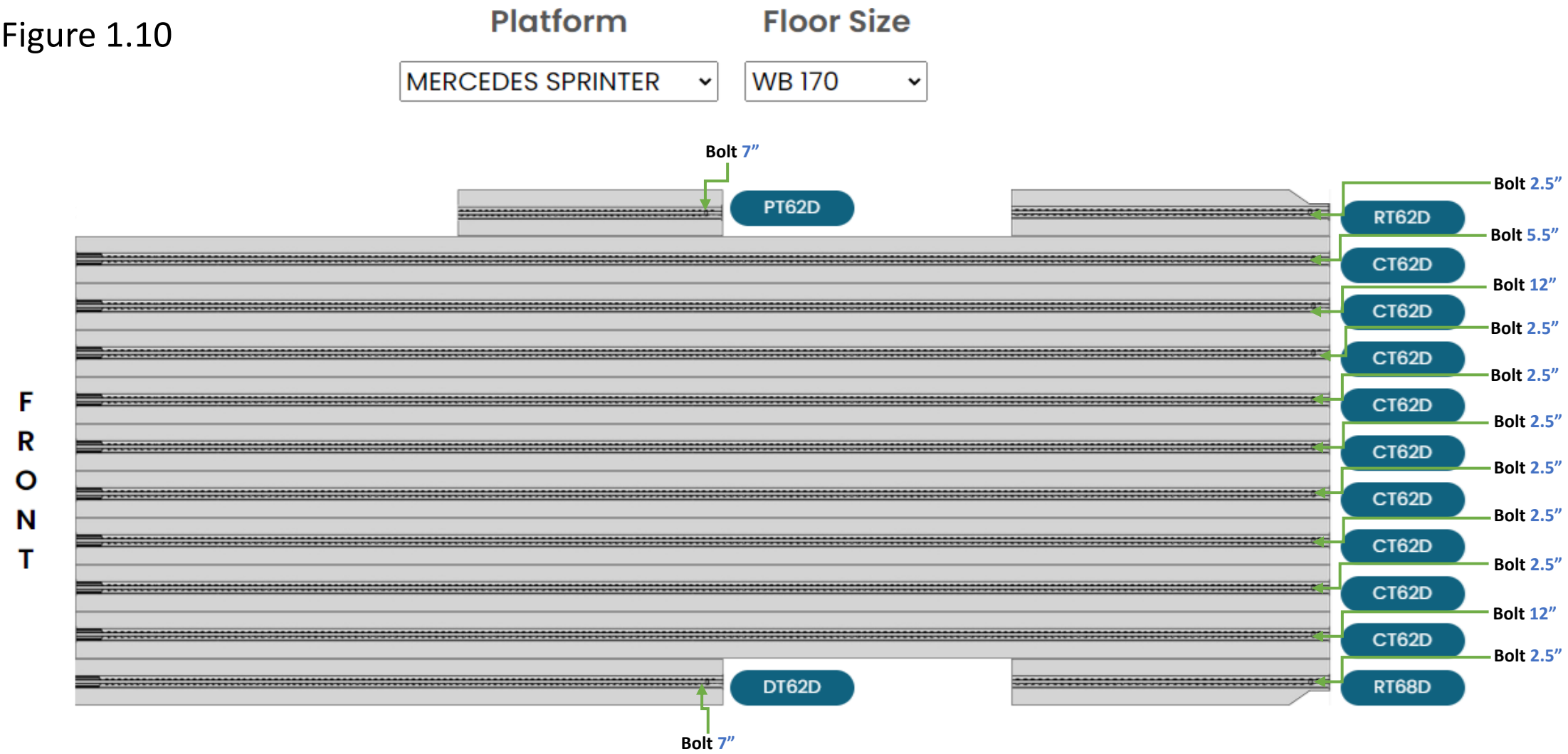
Platform
Floor Size
MERCEDES SPRINTER
WB 170
Bolt 7”
PT62D
Bolt 2.5”
RT62D
Bolt 5.5”
CT62D
Bolt 12”
CT62D
Bolt 2.5”
CT62D
Bolt 2.5”
CT62D
Bolt 2.5”
CT62D
Bolt 2.5”
CT62D
Bolt 2.5”
CT62D
Bolt 2.5”
CT62D
Bolt 12”
CT62D
Bolt 2.5”
RT68D
DT62D
Bolt 7”
FRONT

Figure 1.11

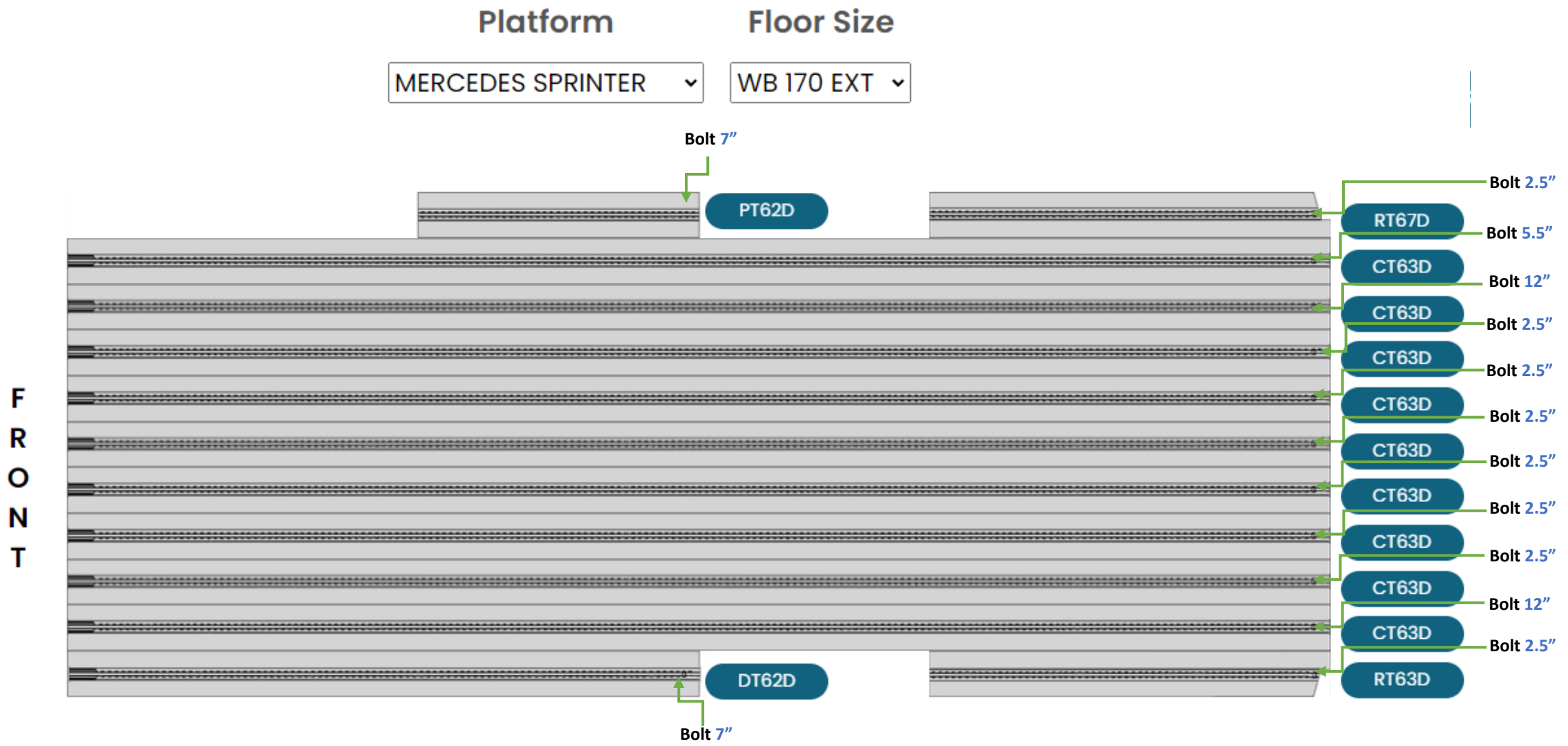
Platform
Floor Size
MERCEDES SPRINTER
WB 170 EXT
Bolt 7”
PT62D
Bolt 2.5”
RT67D
Bolt 5.5”
CT63D
Bolt 12”
CT63D
Bolt 2.5”
CT63D
Bolt 2.5”
CT63D
Bolt 2.5”
CT63D
Bolt 2.5”
CT63D
Bolt 2.5”
CT63D
Bolt 2.5”
CT63D
Bolt 12”
CT63D
Bolt 2.5”
DT62D
RT63D
Bolt 7”
FRONT

Figure 1.12

GMC Savana

