HALF FLOOR

(FRONT)

Half Floor Kit Installation

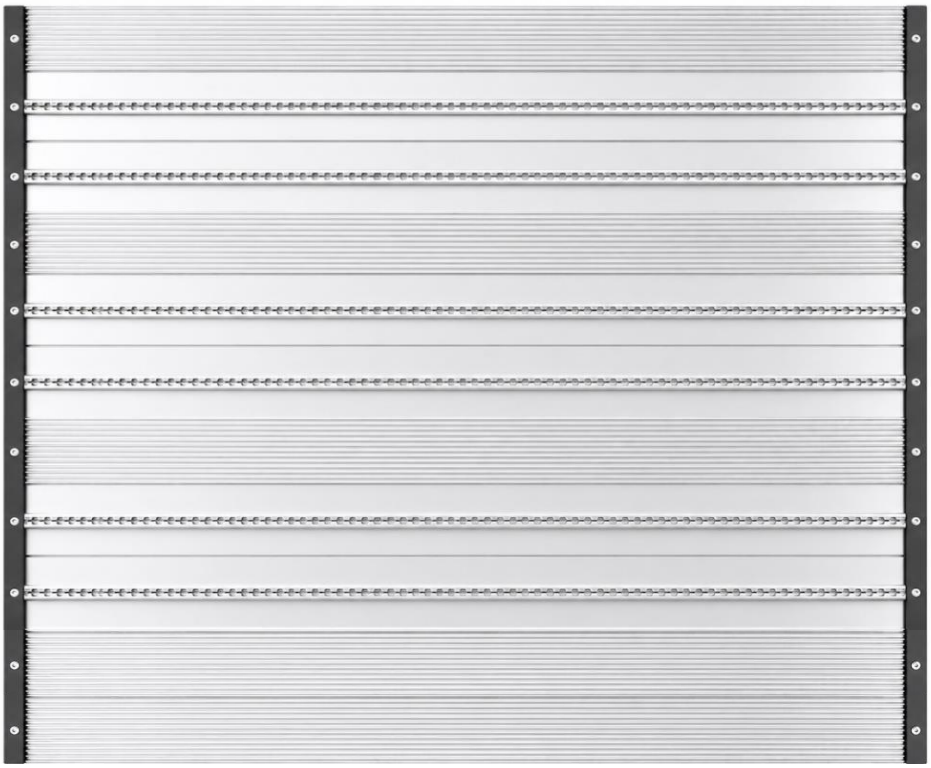

INSTALLATION INSTRUCTIONS

DIFFICULTY
Easy

VEHICLE
Any

PARETO ALUMINUM SYSTEMS LLC

Table of Contents

Table of Contents & Tools Required	**2**
Introduction	**3**
Assembly Requirement and floor panels assembly	
Step 1 – Assemble the floor panels	**4**
Step 2 – Align the floor with Locator Pods	**5**
Step 3 – Install the L channels	**5**
Floor Assembly Installation	
Step 4 – Apply Glue on vehicle floor with ALFO spacers	**6**
Step 5 – Apply Aktivator	**6**
Step 6 - Install the panel assembly inside the van	**7**
Step 7 - Peel and stick the Floor cover (PFLR)	**7**
Warnings, Maintenance & Care	**9**

Tools Required



X 1

Sealant Gun



X 1

Sika Aktivator – 205



X 1

Sikaflex 255 FC



X 1

Paint brush



X 6

Locator Pods

Introduction

This installation guide provides step-by-step instructions for assembling and installing the Half floor assembly (Front) onto the vehicle floor.

Assembly Requirements for Half floor (Front) Installation

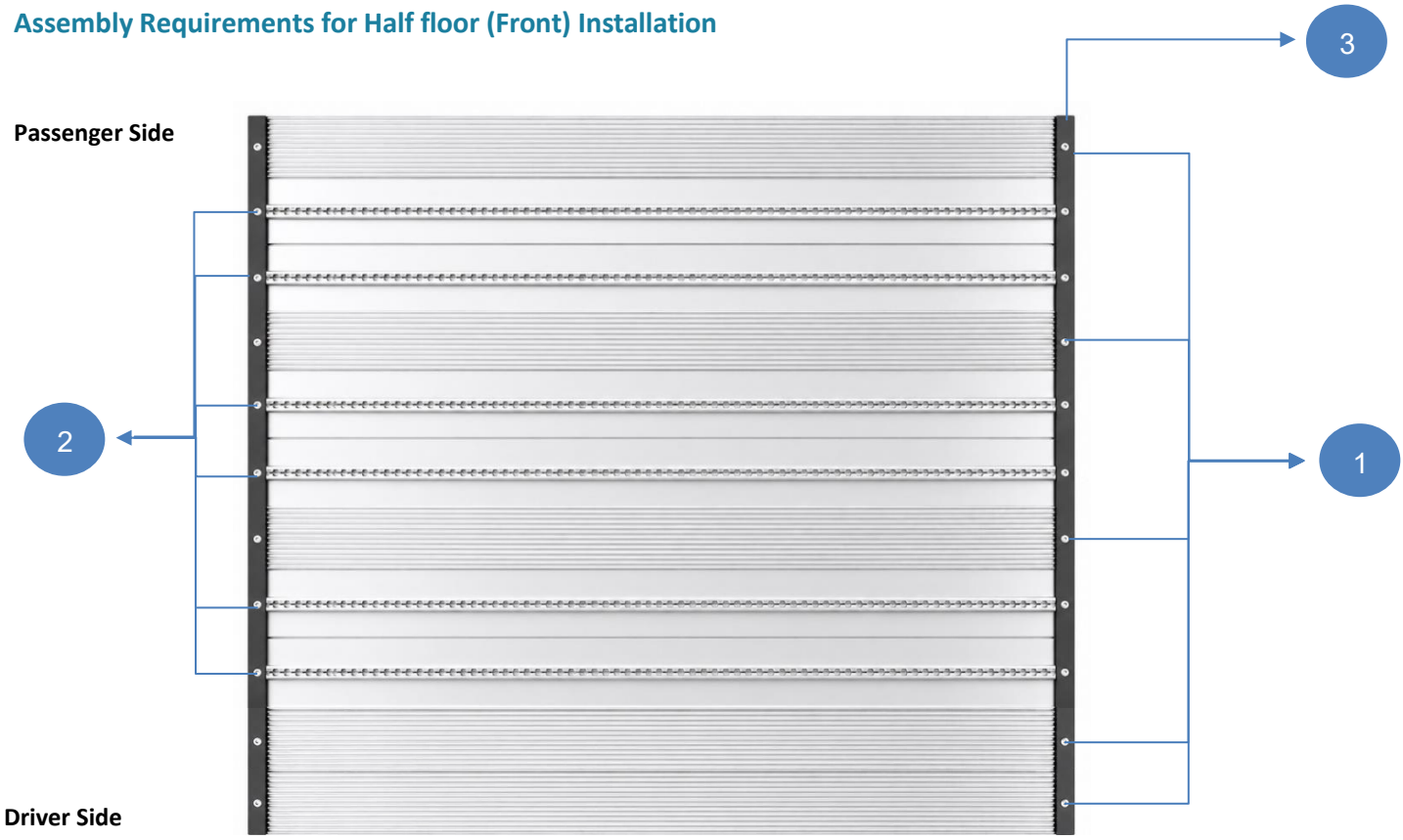

Fully Assembled Half floor assembly (Front)



X 2



X 22

4

5

Fastener to install L channels

Assembly Requirements

No.	Part No.	Description	Qty
1	CN72A	No Track Panel	5
2	CT72A	Track Panel	6
3	X1-12-003A	Side L channels	2
4	S1-12-001A	Plastic ALFO Spacers	2
5	STD	Self-Tapping Screw M6x25mm	22

Floor Panels Assembly

Step 1 – ASSEMBLE THE FLOOR PANELS

- Unbox the crate and place all floor panels on a flat worktable and begin the assembly from passenger side according to the floor layout shown in **page 1**
- Each panel is identified with a unique Part Number label indicating its installation position and orientation (Refer to Figure 1.1)

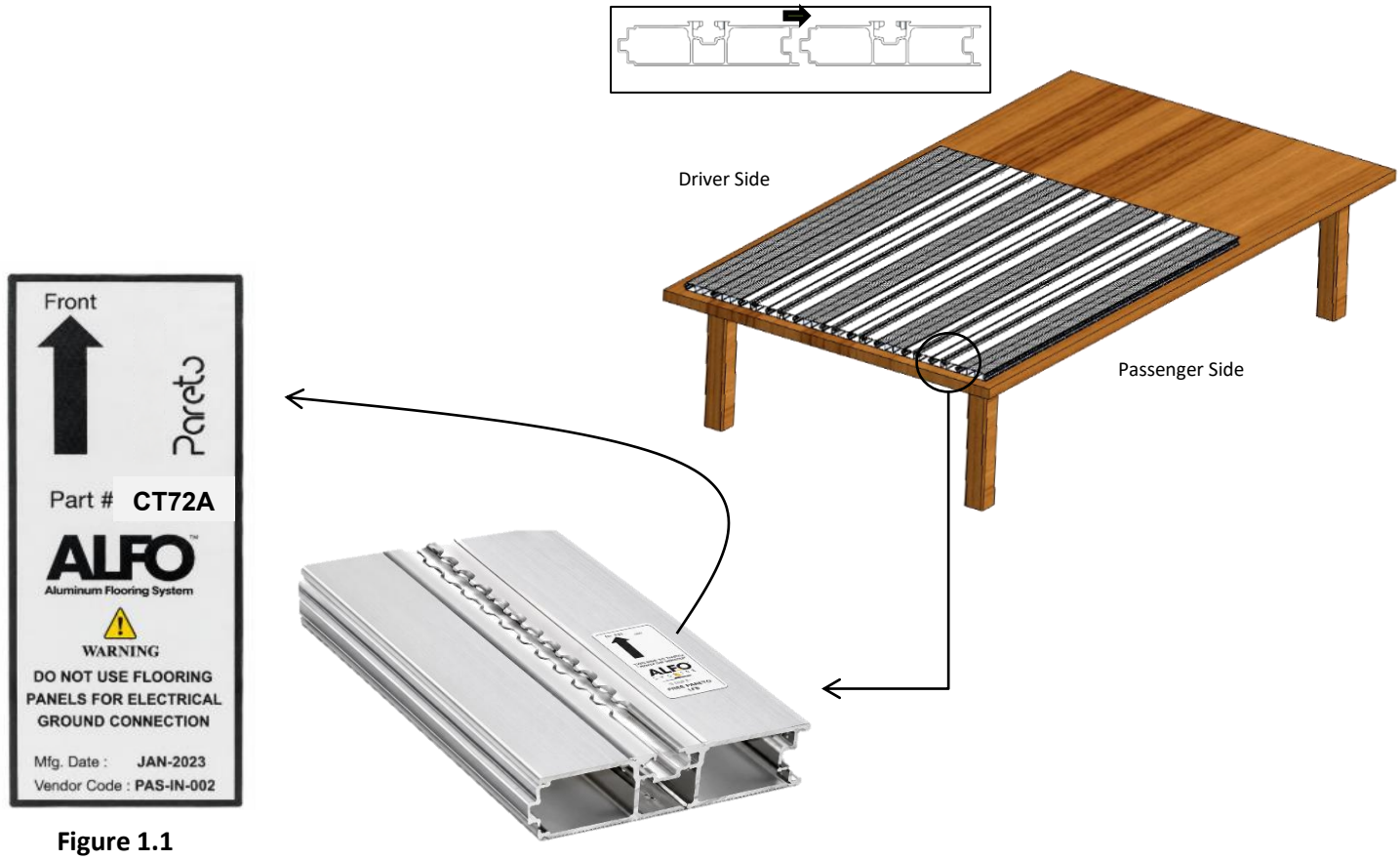

Figure 1.1

Step 2 – ALIGN THE FLOOR WITH LOCATOR PODS

- **Use locator pods to align all the panels.** The locator pods keep the panels aligned during installation and ensure that all bolt holes are properly aligned for fastening the panels to the van floor.

Ensure all panel holes are perfectly aligned before fastening. Misalignment may prevent proper installation of Pareto Flexible Legs.

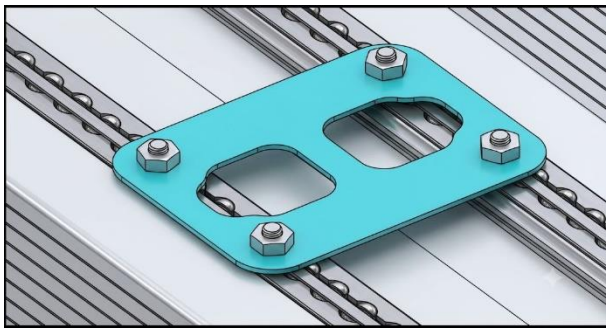

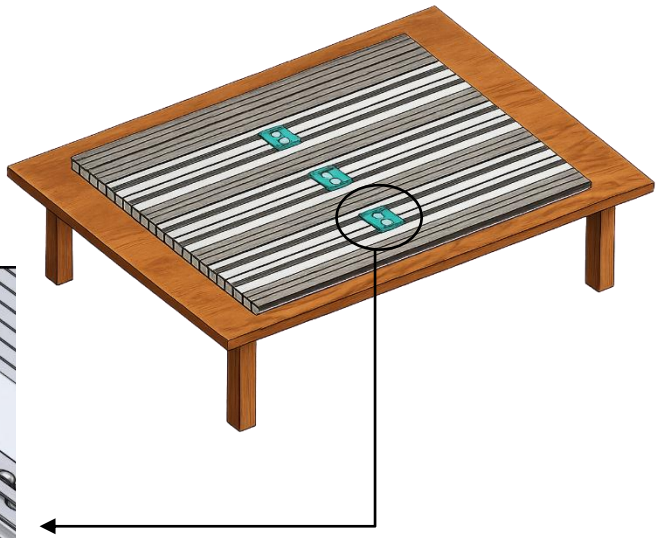

Figure 2.1

Step 3 – INSTALL THE L CHANNELS

- Install the L – Channels at both the ends of the panel and fix with the self-tapping screw at all the provided holes.

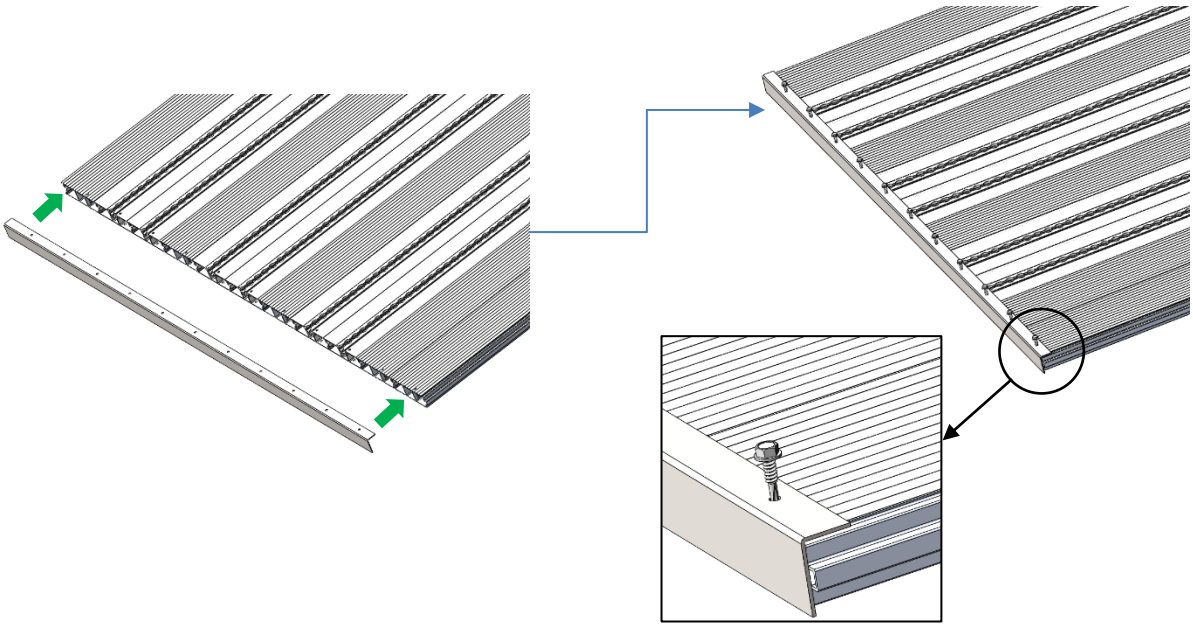

Figure 3.1

Floor Assembly Installation

Step 4 – APPLY GLUE ON VEHICLE FLOOR WITH ALFO SPACERS

- Glue the ALFO spacers at the locations shown. Press them until the top of each spacer is flush with the vehicle floor ribs
- Apply Sikaflex 255 FC along the vehicle floor ribs (red-marked areas shown) using a sealant gun before installing the panel.
- 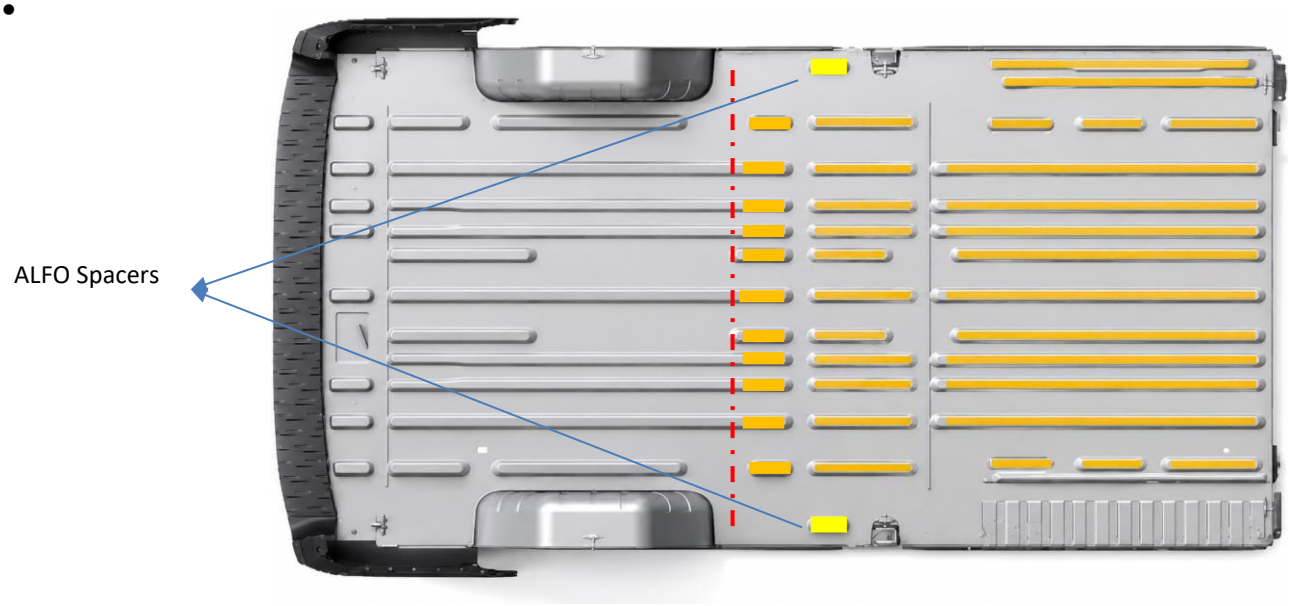

Figure 4.1

Step 5 – APPLY AKTIVATOR

- Tilt the floor and apply Sika Aktivator 205 on the bottom of ALFO floor using the paint brush.

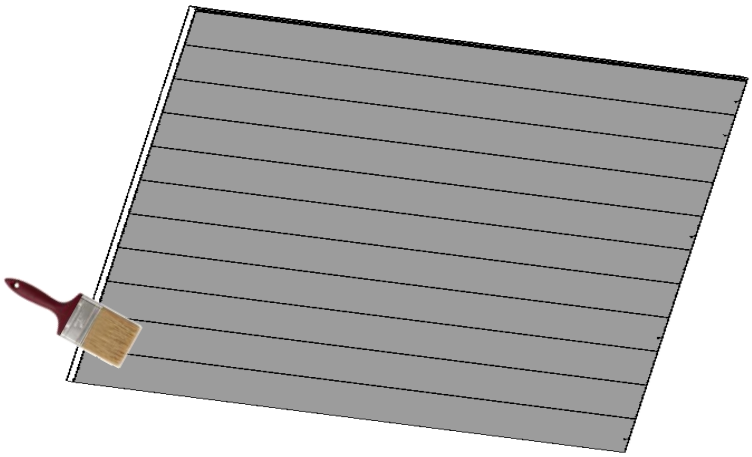

Figure 5.1

Step 6 – INSTALL THE PANEL ASSEMBLY INSIDE THE VAN

- Lift the panel assembly with the locator pod fixed and carefully place it inside the vehicle.
- Adjust the forward and cross- car direction as required

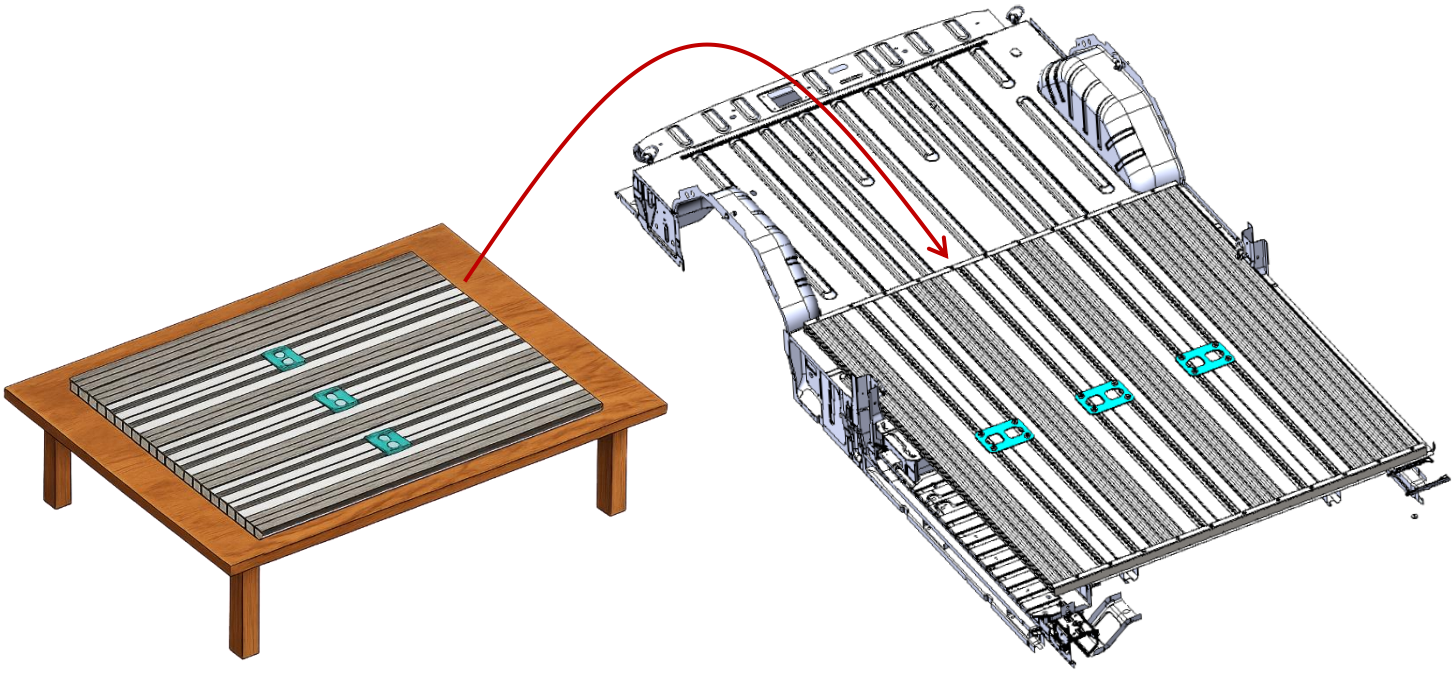

Ensure to place the male side of panel faces towards the driver side

Figure 6.1

Step 7 – PEEL AND STICK THE FLOOR COVER (PFLR)

- Clean the surface of the panel with rubbing alcohol
- Peel the Floor cover (PFLR) and stick it on the floor

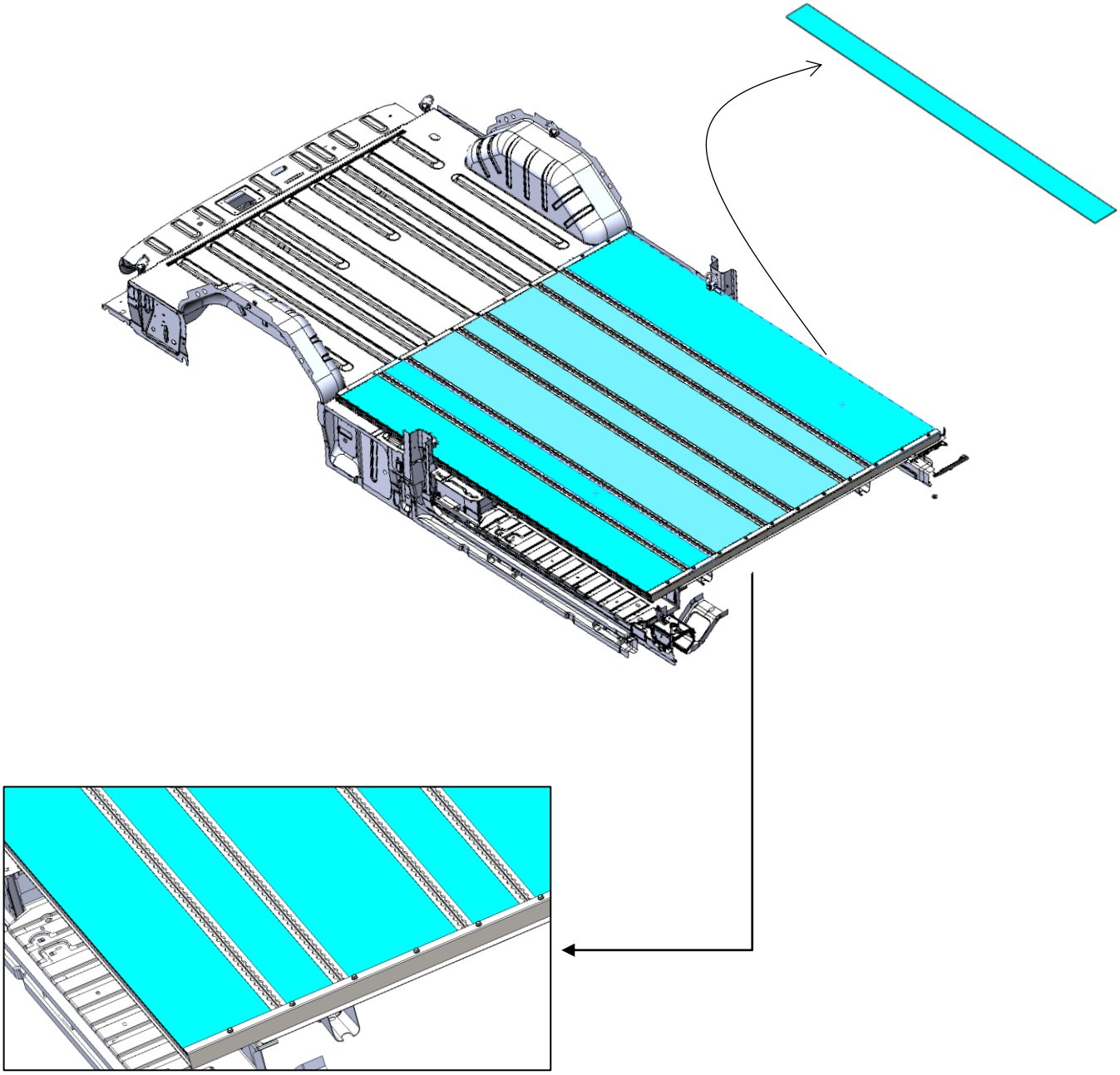

Figure 7.1

WARNINGS ⚠

- Installation must be carried out by qualified personnel.
- Ensure the vehicle is parked on a level surface with the parking brake engaged before installation.
- Verify that all floor panels, ALFO spacers and L-Channels are correctly installed before use
- Use only the hardware supplied with this kit.
- Do not modify, drill or cut any floor panel or structural component unless approved by Pareto Aluminum Systems.
- Ensure Sikaflex® 255 FC and Sika® Aktivator-205 are applied according to the manufacturer's instructions
- Allow the adhesive to cure fully before placing the floor into service.
- Inspect the installation after completion to ensure all components are securely installed

MAINTENANCE & CARE

- Periodically inspect the floor assembly for loose fasteners or damaged components.
- Check that the L-Channels remain securely fastened.
- Inspect the bonded ALFO spacers for signs of separation or damage.
- Do not use aggressive solvents, acids or abrasive cleaning materials.
- Replace any damaged floor panel or hardware immediately.
- After any vehicle collision or structural repair, inspect the complete floor assembly before returning the vehicle to service.
- Ensure the floor covering remains securely bonded and replace it if excessive wear or peeling is observed.

Pareto
Aluminum Systems LLC

If you have any questions, comments or concerns, or need additional information, please do not hesitate to contact us:

info@paretoas.com
+1 810 295 1887
Pareto Aluminum Systems
13150 Haggerty Road, Suite B3-100, Plymouth, MI 48170
www.paretoas.com | ALFO

Buy now on amazon